International
IOR Rectifier

IRHNJ57130
JANSR2N7481U3
100V, N-CHANNEL

RADIATION HARDENED POWER MOSFET SURFACE MOUNT (SMD-0.5)

REF: MIL-PRF-19500/703

R5™ TECHNOLOGY

Product Summary

Part Number	Radiation Level	$R_{DS(on)}$	I_D	QPL Part Number
IRHNJ57130	100K Rads (Si)	0.06Ω	22A*	JANSR2N7481U3
IRHNJ53130	300K Rads (Si)	0.06Ω	22A*	JANSF2N7481U3
IRHNJ54130	600K Rads (Si)	0.06Ω	22A*	JANSG2N7481U3
IRHNJ58130	1000K Rads (Si)	0.075Ω	22A*	JANSH2N7481U3

SMD-0.5

International Rectifier's R5™ technology provides high performance power MOSFETs for space applications. These devices have been characterized for Single Event Effects (SEE) with useful performance up to an LET of 80 (MeV/(mg/cm²)). The combination of low $R_{DS(on)}$ and low gate charge reduces the power losses in switching applications such as DC to DC converters and motor control. These devices retain all of the well established advantages of MOSFETs such as voltage control, fast switching, ease of paralleling and temperature stability of electrical parameters.

Features:

- Single Event Effect (SEE) Hardened
- Ultra Low $R_{DS(on)}$
- Low Total Gate Charge
- Simple Drive Requirements
- Ease of Paralleling
- Hermetically Sealed
- Surface Mount
- Ceramic Package
- Light Weight

Absolute Maximum Ratings

Pre-Irradiation

	Parameter		Units
I_D @ V_{GS} = 12V, T_C = 25°C	Continuous Drain Current	22*	A
I_D @ V_{GS} = 12V, T_C = 100°C	Continuous Drain Current	16	
I_{DM}	Pulsed Drain Current ①	88	
P_D @ T_C = 25°C	Max. Power Dissipation	75	W
	Linear Derating Factor	0.6	W/°C
V_{GS}	Gate-to-Source Voltage	±20	V
E_{AS}	Single Pulse Avalanche Energy ②	70	mJ
I_{AR}	Avalanche Current ①	22	A
E_{AR}	Repetitive Avalanche Energy ①	7.5	mJ
dv/dt	Peak Diode Recovery dv/dt ③	1.4	V/ns
T_J T_{STG}	Operating Junction Storage Temperature Range	-55 to 150	°C
	Pckg. Mounting Surface Temp.	300 (for 5s)	
	Weight	1.0 (Typical)	g

* Current is limited by package

For footnotes refer to the last page

10/24/03

Electrical Characteristics @ Tj = 25°C (Unless Otherwise Specified)

	Parameter	Min	Typ	Max	Units	Test Conditions
BV_{DSS}	Drain-to-Source Breakdown Voltage	100	—	—	V	V_{GS} = 0V, I_D = 1.0mA
$\Delta BV_{DSS}/\Delta T_J$	Temperature Coefficient of Breakdown Voltage	—	0.11	—	V/°C	Reference to 25°C, I_D = 1.0mA
$R_{DS(on)}$	Static Drain-to-Source On-State Resistance	—	—	0.06	Ω	V_{GS} = 12V, I_D = 16A ④
$V_{GS(th)}$	Gate Threshold Voltage	2.0	—	4.0	V	V_{DS} = V_{GS}, I_D = 1.0mA
g_{fs}	Forward Transconductance	13	—	—	S (℧)	V_{DS} > 15V, I_{DS} = 16A ④
I_{DSS}	Zero Gate Voltage Drain Current	—	—	10	µA	V_{DS}= 80V ,V_{GS}=0V
		—	—	25		V_{DS} = 80V, V_{GS} = 0V, T_J = 125°C
I_{GSS}	Gate-to-Source Leakage Forward	—	—	100	nA	V_{GS} = 20V
I_{GSS}	Gate-to-Source Leakage Reverse	—	—	-100		V_{GS} = -20V
Q_g	Total Gate Charge	—	—	50	nC	V_{GS} =12V, I_D = 22A V_{DS} = 50V
Q_{gs}	Gate-to-Source Charge	—	—	7.4		
Q_{gd}	Gate-to-Drain ('Miller') Charge	—	—	20		
$t_{d(on)}$	Turn-On Delay Time	—	—	25	ns	V_{DD} = 50V, I_D = 22A, V_{GS} =12V, R_G = 7.5Ω
t_r	Rise Time	—	—	100		
$t_{d(off)}$	Turn-Off Delay Time	—	—	35		
t_f	Fall Time	—	—	30		
$L_S + L_D$	Total Inductance	—	4.0	—	nH	Measured from the center of drain pad to center of source pad
C_{iss}	Input Capacitance	—	1005	—	pF	V_{GS} = 0V, V_{DS} = 25V f = 1.0MHz
C_{oss}	Output Capacitance	—	365	—		
C_{rss}	Reverse Transfer Capacitance	—	50	—		

Source-Drain Diode Ratings and Characteristics

	Parameter	Min	Typ	Max	Units	Test Conditions
I_S	Continuous Source Current (Body Diode)	—	—	22*	A	
I_{SM}	Pulse Source Current (Body Diode) ①	—	—	88		
V_{SD}	Diode Forward Voltage	—	—	1.2	V	T_j = 25°C, I_S = 22A, V_{GS} = 0V ④
t_{rr}	Reverse Recovery Time	—	—	250	ns	T_j = 25°C, I_F = 22A, di/dt ≤100A/µs V_{DD} ≤ 25V ④
Q_{RR}	Reverse Recovery Charge	—	—	850	nC	
t_{on}	Forward Turn-On Time	Intrinsic turn-on time is negligible. Turn-on speed is substantially controlled by $L_S + L_D$.				

* Current is limited by package

Thermal Resistance

	Parameter	Min	Typ	Max	Units	Test Conditions
R_{thJC}	Junction-to-Case	—	—	1.67	°C/W	
$R_{thJ-PCB}$	Junction-to-PC board	—	6.9	—		soldered to a 2" square copper-clad board

Note: Corresponding Spice and Saber models are available on International Rectifier Web site.

For footnotes refer to the last page

International Rectifier Radiation Hardened MOSFETs are tested to verify their radiation hardness capability. The hardness assurance program at International Rectifier is comprised of two radiation environments. Every manufacturing lot is tested for total ionizing dose (per notes 5 and 6) using the TO-3 package. Both pre- and post-irradiation performance are tested and specified using the same drive circuitry and test conditions in order to provide a direct comparison.

Table 1. Electrical Characteristics @ Tj = 25°C, Post Total Dose Irradiation ⑤⑥

	Parameter	Up to 600K Rads(Si)[1]		1000K Rads (Si)[2]		Units	Test Conditions
		Min	Max	Min	Max		
BV_{DSS}	Drain-to-Source Breakdown Voltage	100	—	100	—	V	V_{GS} = 0V, I_D = 1.0mA
$V_{GS(th)}$	Gate Threshold Voltage	2.0	4.0	1.5	4.0		V_{GS} = V_{DS}, I_D = 1.0mA
I_{GSS}	Gate-to-Source Leakage Forward	—	100	—	100	nA	V_{GS} = 20V
I_{GSS}	Gate-to-Source Leakage Reverse	—	-100	—	-100		V_{GS} = -20 V
I_{DSS}	Zero Gate Voltage Drain Current	—	10	—	25	µA	V_{DS}= 80V, V_{GS} =0V
$R_{DS(on)}$	Static Drain-to-Source ④ On-State Resistance (TO-3)	—	0.064	—	0.08	Ω	V_{GS} = 12V, I_D =16A
$R_{DS(on)}$	Static Drain-to-Source ④ On-State Resistance (SMD-.5)	—	0.06	—	0.075	Ω	V_{GS} = 12V, I_D =16A
V_{SD}	Diode Forward Voltage ④	—	1.2	—	1.2	V	V_{GS} = 0V, I_S = 22A

1. Part numbers IRHNJ57130 (JANSR2N7481U3), IRHNJ53130 (JANSF2N7481U3) and IRHNJ54130 (JANSG2N7481U3)
2. Part number IRHNJ58130 (JANSH2N7481U3)

International Rectifier radiation hardened MOSFETs have been characterized in heavy ion environment for Single Event Effects (SEE). Single Event Effects characterization is illustrated in Fig. a and Table 2.

Table 2. Single Event Effect Safe Operating Area

Ion	LET MeV/(mg/cm²))	Energy (MeV)	Range (µm)	V_{DS} (V)				
				@V_{GS}=0V	@V_{GS}=-5V	@V_{GS}=-10V	@V_{GS}=-15V	@V_{GS}=-20V
Br	36.7	309	39.5	100	100	100	100	100
I	59.4	341	32.5	100	100	100	35	25
Au	82.3	350	28.4	100	100	80	25	—

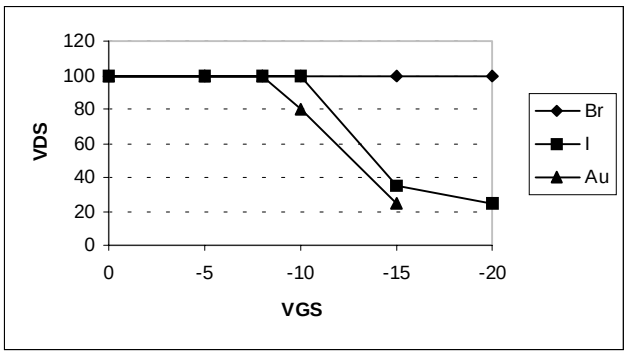

Fig a. Single Event Effect, Safe Operating Area

For footnotes refer to the last page

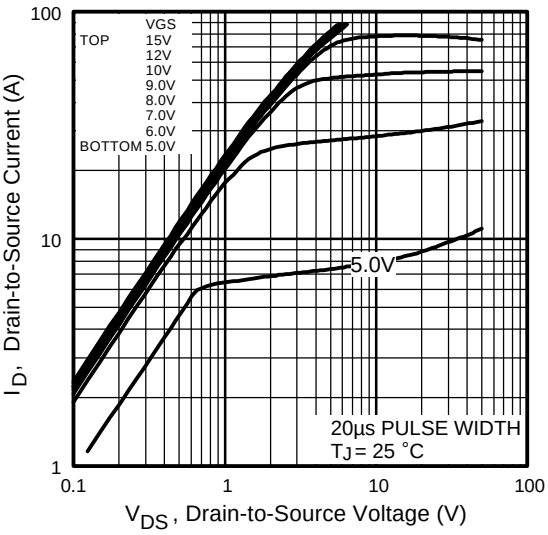

Fig 1. Typical Output Characteristics

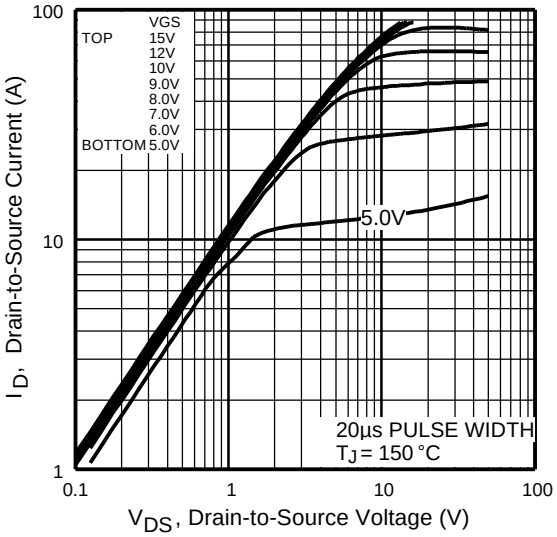

Fig 2. Typical Output Characteristics

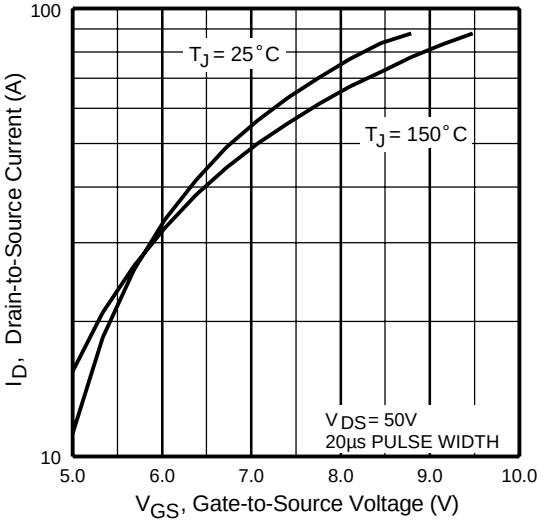

Fig 3. Typical Transfer Characteristics

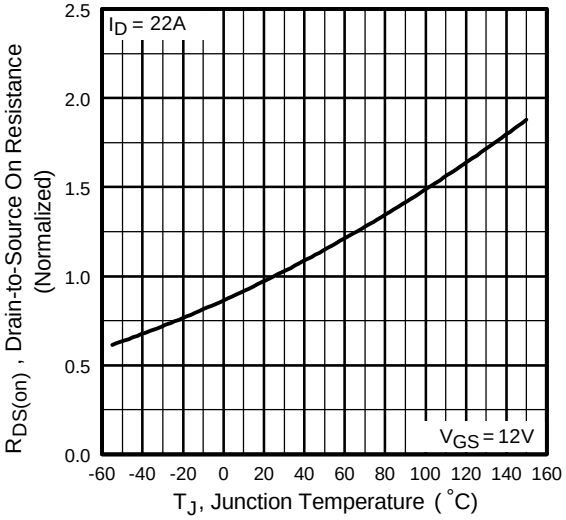

Fig 4. Normalized On-Resistance Vs. Temperature

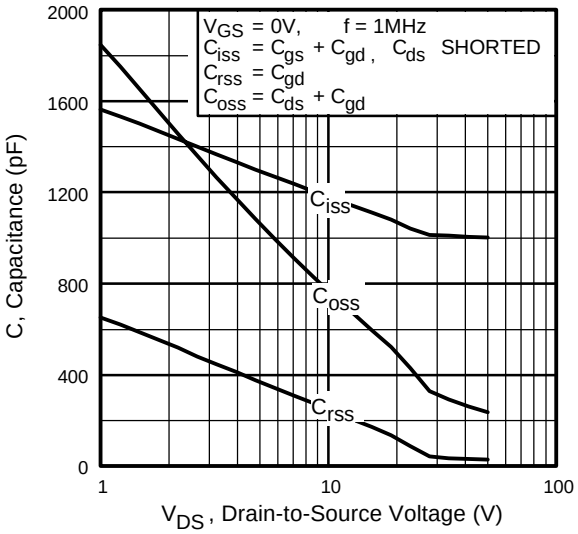

Fig 5. Typical Capacitance Vs. Drain-to-Source Voltage

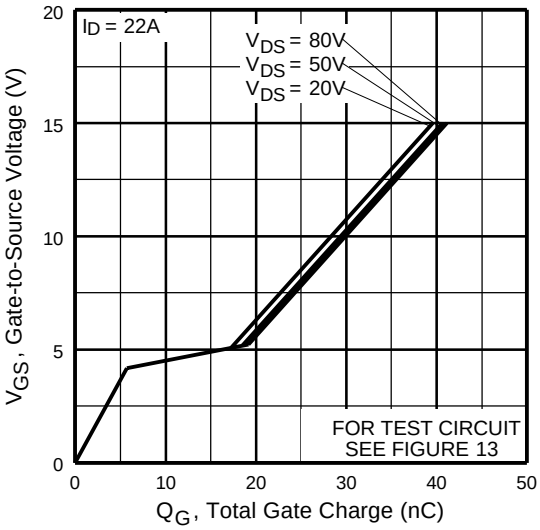

Fig 6. Typical Gate Charge Vs. Gate-to-Source Voltage

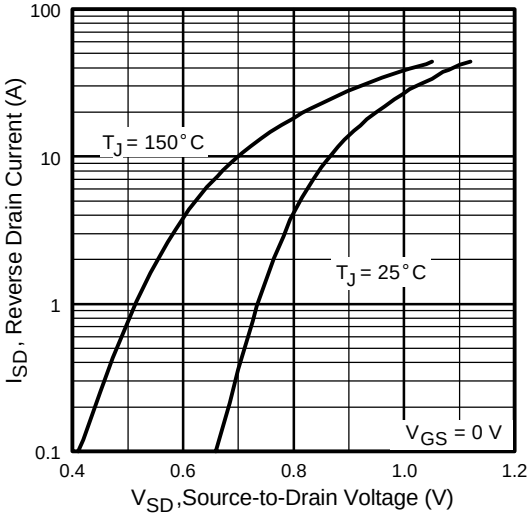

Fig 7. Typical Source-Drain Diode Forward Voltage

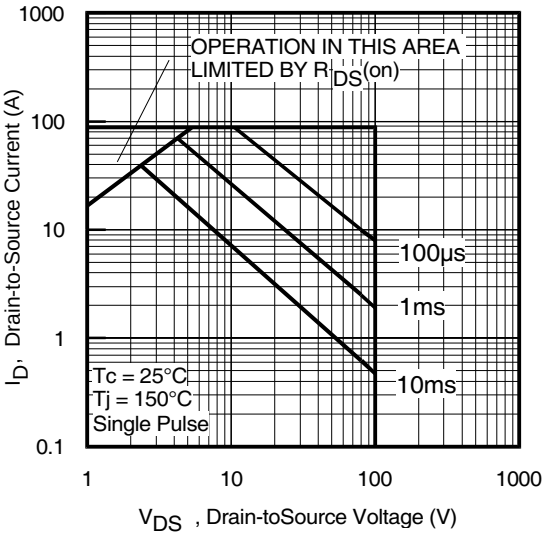

Fig 8. Maximum Safe Operating Area

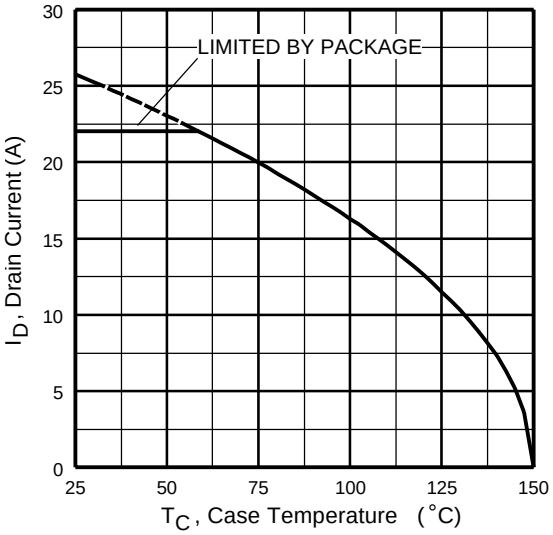

Fig 9. Maximum Drain Current Vs. Case Temperature

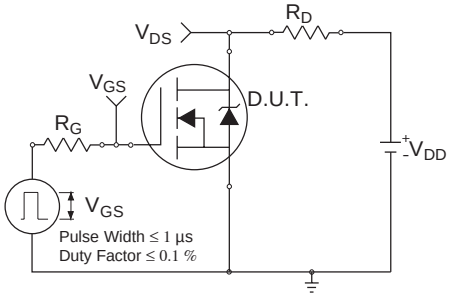

Fig 10a. Switching Time Test Circuit

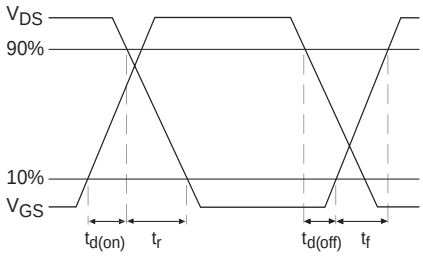

Fig 10b. Switching Time Waveforms

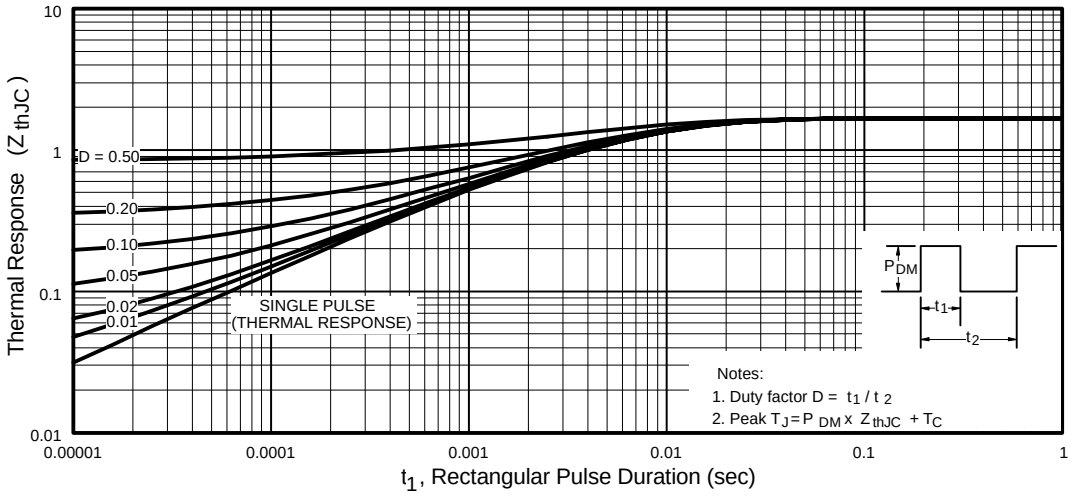

Fig 11. Maximum Effective Transient Thermal Impedance, Junction-to-Case

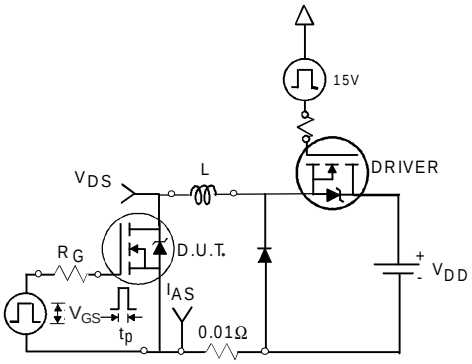

Fig 12a. Unclamped Inductive Test Circuit

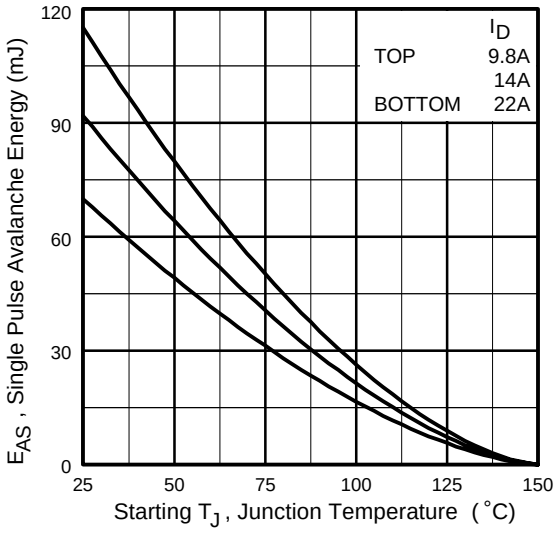

Fig 12c. Maximum Avalanche Energy Vs. Drain Current

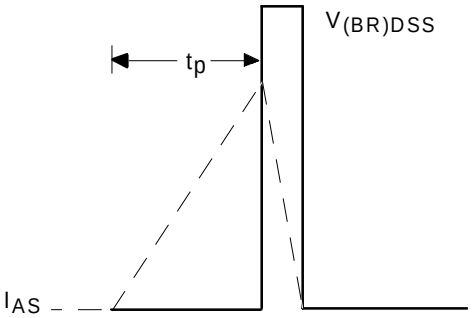

Fig 12b. Unclamped Inductive Waveforms

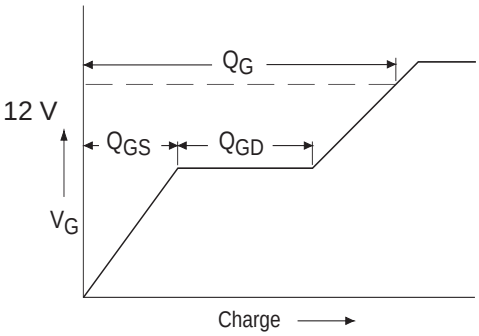

Fig 13a. Basic Gate Charge Waveform

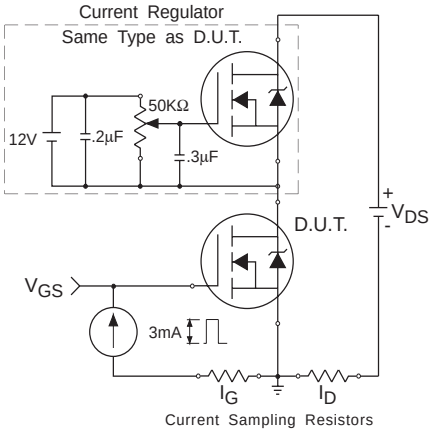

Fig 13b. Gate Charge Test Circuit

Footnotes:

① Repetitive Rating; Pulse width limited by maximum junction temperature.

② V_{DD} = 50V, starting T_J = 25°C, L= 0.3 mH Peak I_L = 22A, V_{GS} = 12V

③ $I_{SD} \leq$ 22A, di/dt $\leq$ 155A/µs, $V_{DD} \leq$ 100V, $T_J \leq$ 150°C

④ Pulse width $\leq$ 300 µs; Duty Cycle $\leq$ 2%

⑤ **Total Dose Irradiation with V_{GS} Bias.** 12 volt V_{GS} applied and V_{DS} = 0 during irradiation per MIL-STD-750, method 1019, condition A.

⑥ **Total Dose Irradiation with V_{DS} Bias.** 80 volt V_{DS} applied and V_{GS} = 0 during irradiation per MIL-STD-750, method 1019, condition A.

Case Outline and Dimensions — SMD-0.5

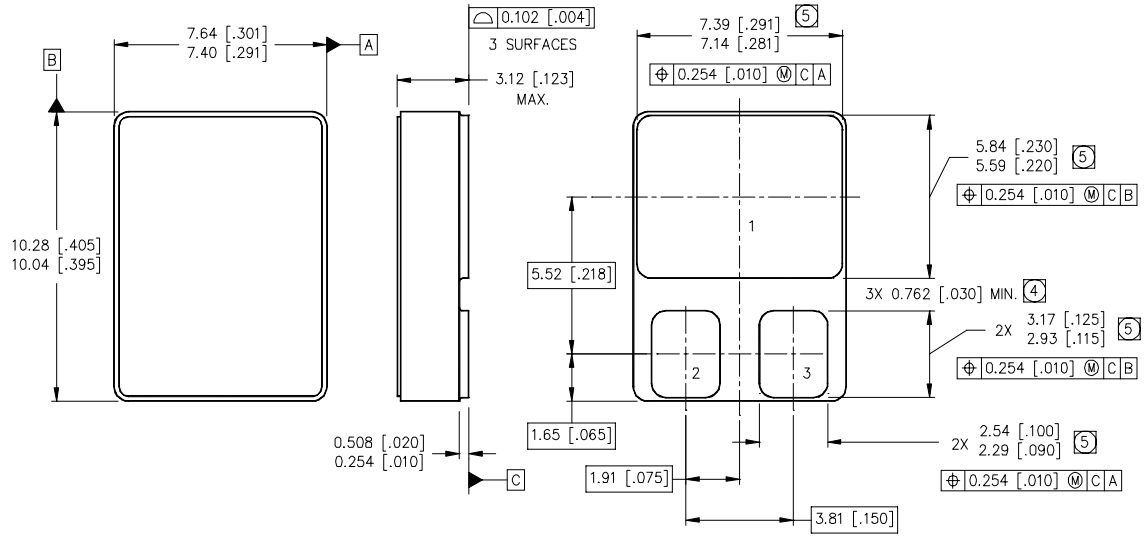

NOTES:

1. DIMENSIONING & TOLERANCING PER ASME Y14.5M-1994.
2. CONTROLLING DIMENSION: INCH.
3. DIMENSIONS ARE SHOWN IN MILLIMETERS [INCHES].
4. DIMENSION INCLUDES METALLIZATION FLASH.
5. DIMENSION DOES NOT INCLUDE METALLIZATION FLASH.

PAD ASSIGNMENTS

1 = DRAIN
2 = GATE
3 = SOURCE

International
IOR Rectifier

IR WORLD HEADQUARTERS: 233 Kansas St., El Segundo, California 90245, USA Tel: (310) 252-7105
IR LEOMINSTER : 205 Crawford St., Leominster, Massachusetts 01453, USA Tel: (978) 534-5776
TAC Fax: (310) 252-7903
Visit us at www.irf.com for sales contact information.

Data and specifications subject to change without notice. 10/03